Mechanical Dial Comparator Millimess 1002 / 1002 T / 1003 / 1003 T / 1003 XL / 1003 XLT / 1004 / 1004 T

IP54 | DIN 879-1

- Large, high contrast dial face
- Adjustable tolerance markers
- Lockable fine adjustment screw
- Shockproof movement
- Mounting shank and measuring spindle are both made of hardened stainless steel
- Measuring spindle is mounted in a high precision ball guide for minimal hysteresis
- Insensitive to lateral forces (side play) acting on the measuring spindle
- Maximum sensitivity and accuracy are ensured by the jeweled movement and in conjunction with the precision gears and pinions
- Box type protective housing
- Constant measuring force
- Measuring spindle can be retracted with either a screw in cable release or with a lifting knob
- **Scope of delivery:** Case

Technical Data

Order no.		4335000	4334102	4335005	4334000	4334103	4334005	4334001	4334006	4333000	4333005
Product type		1002		1002 T	1003		1003 T	1003 XL	1003 XLT	1004	1004 T
Measuring range	µm	± 25			± 50			± 130			
Graduation value	µm	0.5			1			2		5	
Type of dial face		25–0–25			50–0–50			130–0–130			
Error limit G_e	µm	0.5			1			2		3.5	
Error limit G_{ges}	µm	0.6			1.2			2.4		4	
Error limit G_t	µm	0.4			0.7			1.4		3	
Measuring value hysteresis f_u	µm	0.3			0.5			1			
Repeatability f_w	µm	0.3			0.5			1			
Standard		Factory standard			DIN 879–1			Factory standard			
Overtravel	mm	2.8						2.5			
Measuring force	N	1									
Scale diameter	mm	50									
Dial color		yellow	white	yellow		white	yellow			white	
IP protection category				IP 54			IP 54		IP 54		IP 54

Order no.	Mounting shaft	Scale diameter
	mm	mm
4335000	8	50
4334102	8	50
4335005	8	50
4334000	8	50
4334103	8	50
4334005	8	50
4334001	8	50
4334006	8	50
4333000	8	50
4333005	8	50

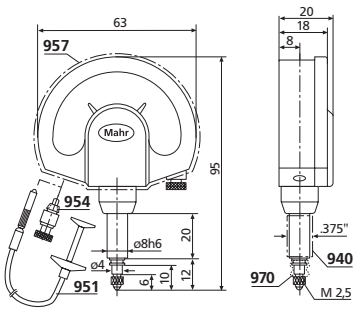

Accessories

Order no.	Product name	Product type
4310103	Adapter bush (.375" / 8 mm)	940
4372000	Cable release (250 mm)	951
4372030	Lifting knob	954
4373030	Splash guard cover	957
4334786	Rubber bellows	970
4375002	Lug back to mount on mounting shank 8h6 mm	963

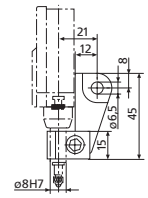

963