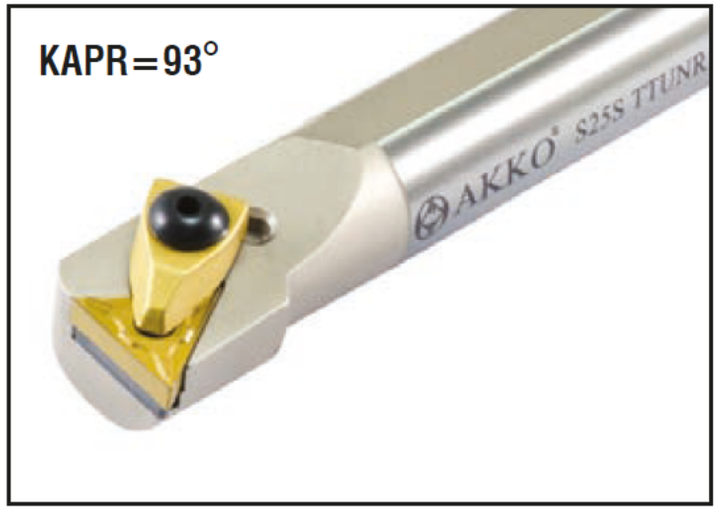

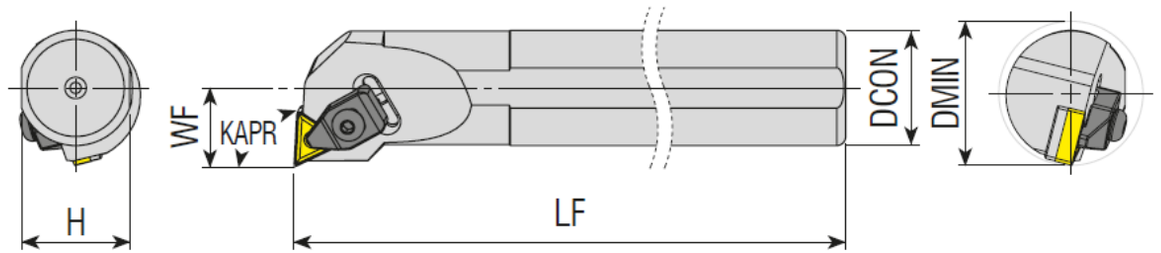

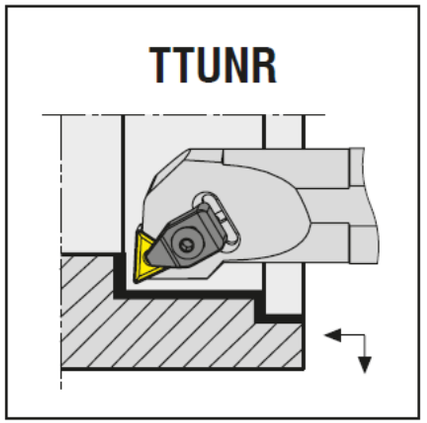

Takım Kodu *Ordering Code* *Bestell-Bezeichnung*	Stok *Stock* *Lager*		Takım Ölçüleri (mm) *Dimension (mm)* *Abmessung (mm)*					Kesici Uç *Insert* *Wendeschneidplatte*	Yedek Parçaları / *Spare Parts* / *Ersatzteile*						
	R	L	DCON	H	LF	WF	DMIN		Baskı Pabucu *Wedge Clamp* *Spannpratze* 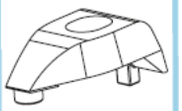	Pabuç Vidası *Clamp Screw* *Klemmschraube*	Altlık *Shim* *Unterlage*	Altlık Vidası *Shim Screw* *Schraube für Unterlage*	Sekman *Ring* *Feder*	Pul *Stamp* *Ring*	Anahtar *Allen Key* *Innensechskantschlüssel* 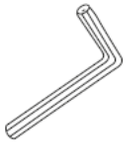
S25S TTUNR/L 16	●	●	25	23	250	17	≥32	**TNM. 1604..**	ATK-01	AKV-01-M5x22	AATN -2-0002	AAV-03-M5x12	-	ABPL-01	AAL-03-3
S32T TTUNR/L 16	●	●	32	30	300	22	≥40								
S25S TTUNR/L 22	●	●	25	23	250	17	≥32	**TNM. 2204..**	ATK-02	AKV-30-M6x22	AATN -3-0015	AAV-02-M5x12	AS-01		
S32T TTUNR/L 22	●	●	32	30	300	22	≥40								
S40U TTUNR/L 22	●	●	40	37.5	350	27	≥50								
S50V TTUNR/L 22	●	●	50	47	400	35	≥63								